Launder Heaters

We would like to take this opportunity to introduce **Excel Heat Ltd;** a long standing company of over thirty five years who manufacture among other things launder heating systems.

We specialise is designing launder heating systems, for new and existing applications from the initial design concept through manufacturing, testing, delivery to site and commissioning.

In order to meet our customers high expectations and delivery schedules, we manufacture all the equipment, including the control system, in house; ensuring the highest quality and procurement control.

The systems can vary considerable from simple on / off controlled heaters, to maintain a degree of heat in the launder system, to a fully PLC controlled system to both preheat and maintain the temperature in the launder system, if necessary varying temperatures along the length of the launder.

The system is usually hinged and can consist of a simple manual lifting mechanism with the assistance of counterbalances, or it can be pneumatically operated in a sequence, depending on the size and configuration of the launder lids

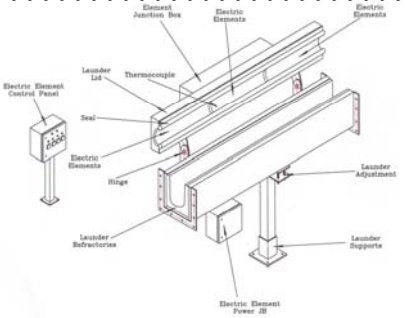

The power supply to the heated launder lids can be at a number of voltages ranging from 55volts to 415 volts depending on the heating requirements and the customer's preference.

An integrated sealing system is incorporated to minimise heat loss. Embedded or shielded elements are used to protect them from splashes of molten aluminium as well as electrically insulating them.

The use of electrical heating elements has the advantages of clean heating that is uniformly distributed along the length of the launder system, this helps prevent hot and cold spots and is very controllable.

EXCEL HEAT LTD

Oak Street, Quarry Bank, Brierley Hill, West Midlands, England. DY5 2JQ

TELE:- (+ 44) 01384 560 713 FAX(+44) 01384 411 742 E-Mail excelheat@freeuk.com